viewgo

Warranty 15 years

Certified B Corporation Learn more at bcorp.com

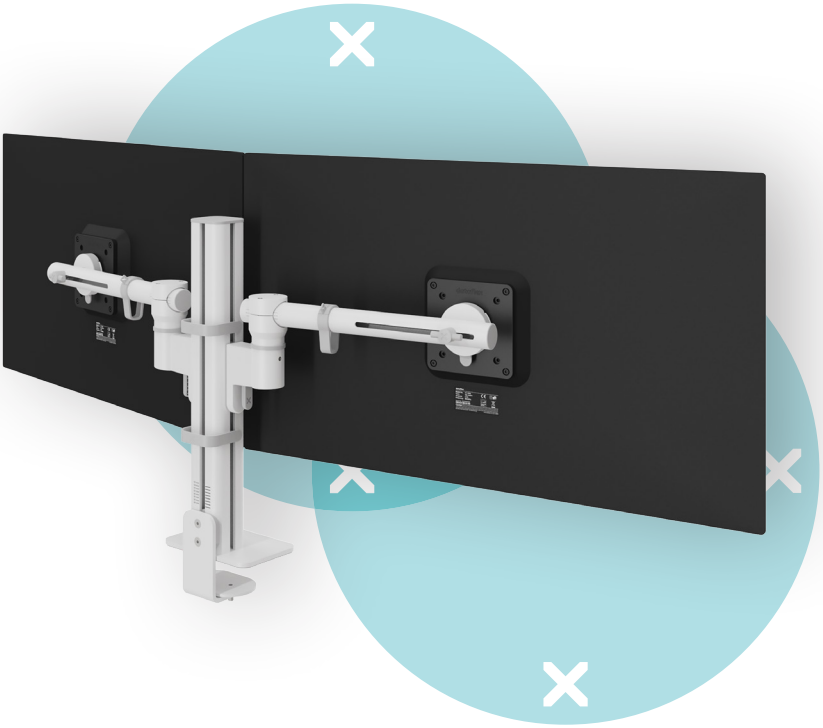

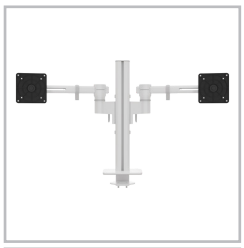

48.220

Viewgo modular monitor arm - desk 220

A 1×2 dual-monitor mount suited for flexible workspaces and possible future changes. The four-slot aluminium pole allows simple, tool-free height adjustment for each screen. Monitors can be positioned in portrait or landscape while keeping the setup clean and aligned. The modular design makes it easy to adjust the configuration over time. Components can be added or replaced when your way of working evolves.

- Static height adjustment of 345 mm
- Wings support monitors up to 9 kg and 32"
- Independent height adjustment per monitor
- Main components made of aluminium and steel
- 450 mm extrusion profile with four vertical mounting slots
- Full monitor flexibility: tilt +25°/–25°, swivel +90°/–90°, rotate +90°/–90°
- Standard VESA quick release for fast and secure mounting
- Compatible with tablet holder and laptop holder
- Fitted with cable clips to guide cables tidily (up to 12 cables)
- ISO 9241-5 compliant: Designed in accordance with ergonomic requirements for visual display workstations
- Compatible with VESA MIS-D 75 × 75 /100 × 100 mm
- Hybrid top access clamp for easy and secure installation
- Includes a desk clamp and bolt-through mounting kit
- Suitable for desktop thicknesses from 5 to 40 mm (clamp) or 50 mm (bolt-through)
- Maximum monitor size: height 1000 mm, width 770 mm

All dimensions are in millimetres (1 mm is 0,039")

viewgo

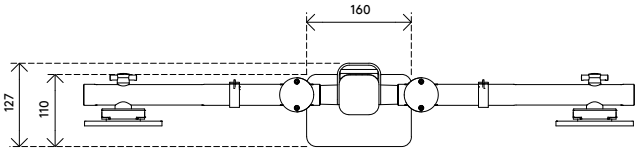

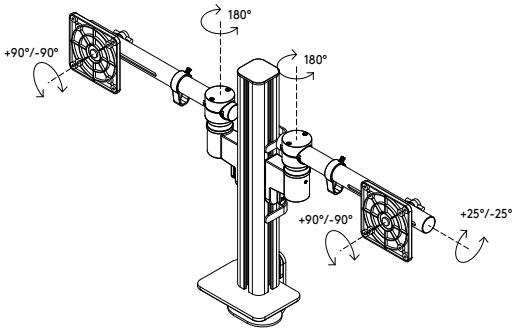

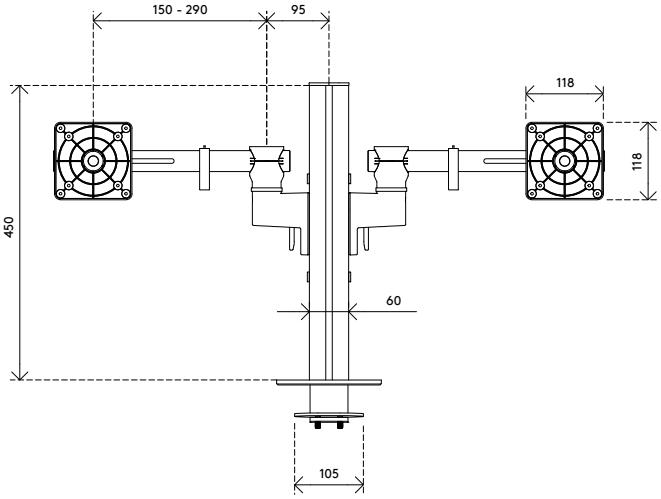

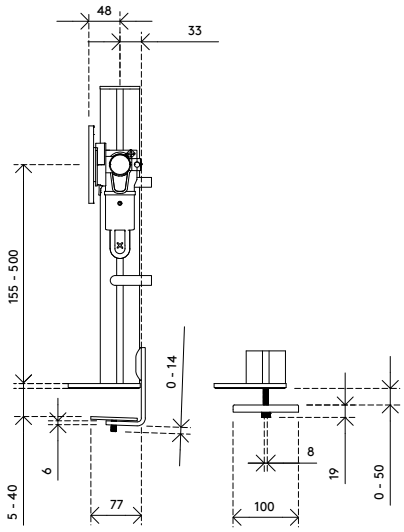

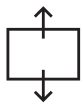
345 mm (13,5")

+25°/-25°

+90°/-90°

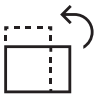
+90°/-90°

32"

1000 mm (39,3")

770 mm (30,3")

2 x 9 kg (19,8 lb)

Viewgo modular monitor arm - desk 220

2026/03/12

48.220	555 x 340 x 160 mm	1 pcs
white	6,55 kg	805410482206

www.dataflex-int.com